C.I.P.	30 Fl. N.E. Purdey Country of Origin: GB	TAB. II Date 84-06-14 Revision 11-05-25

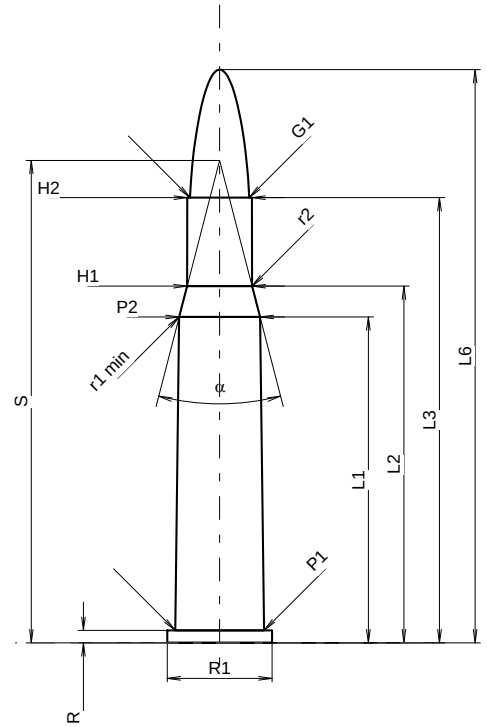

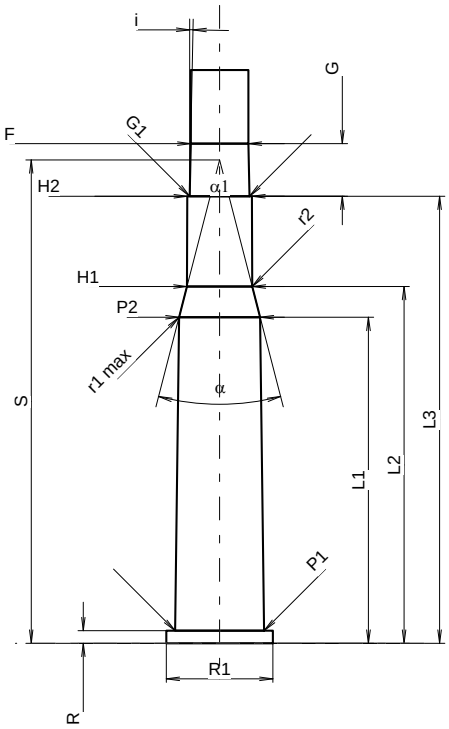

Scale 1.0:1

CARTRIDGE MAXI

Lengths

L1 *	=	43.03	
L2 *	=	47.09	
L3 1)	=	58.78	
L4	=		
L5	=		
L6	=	75.69	

Case Head

R 1)	=	1.63	-0.25
R1	=	13.84	
R3	=		
E	=		
E1	=		
e min	=		
δ	=		
f	=		
β	=		

Powder Chamber

P1	=	11.73
P2 *	=	10.69

Junction Cone

α	=	29°00'01"
S	=	63.70
r1 min	=	3.81
r2	=	3.81

Collar

H1 *	=	8.59
H2 1)	=	8.51

Projectile

G1 1)	=	7.82
G2	=	
F	=	
L3+G 1)	=	65.73

Pressures (Energies)
Method Transducer

Pmax	=	3200	bar
PK	=	3680	bar
PE	=	4000	bar
M	=	25.00	
EE	=	3455	Joule

Miscellaneous Dimensions

Fe 1)4)	=	0.15
delta L	=	

CHAMBER MINI

Lengths

L1 *	=	43.05
L2 *	=	47.12
L3 1)	=	59.03

Breech

R 1)	=	1.65
R1	=	14.10
R2	=	
R3	=	
r	=	

Powder Chamber

E	=	
P1 1)	=	11.76
P2 *	=	10.72

Junction Cone

α	=	28°55'55"
S	=	63.83
r1 max	=	3.81
r2	=	3.81

Collar

H1 *	=	8.62
H2 1)	=	8.53

Commencement of Rifling

G1 1)*	=	7.89
G 1)*	=	6.95
α1	=	180°
h	=	
s	=	
i 1)	=	1°06'46"
w	=	

Barrel

F 1)*	=	7.62
Z 1)	=	7.82

Grooves

b	=	2.72	
N	=	6	
u	=	254.00	
Q	=	47.27	mm²

Dimensions in << mm >>
Dimensions and Tolerances for Proof Barrels
see Appendix CR 1.

Notes:
1) Check for safety reasons
4) Headspace on Rim
* Basic dimensions